KOLLMORGEN®

Because Motion Matters™

4-Channel Digital Outputs - 24 V DC, 0.5 A

The 4-channel digital output terminals connect the binary 24 V control signals electrically isolated with the actuators. The Bus Terminals contain four channels that indicate their signal state by means of LEDs. The 4-channel Bus Terminals enable the direct connection of four 2-wire sensors. Four ground connection points are provided.

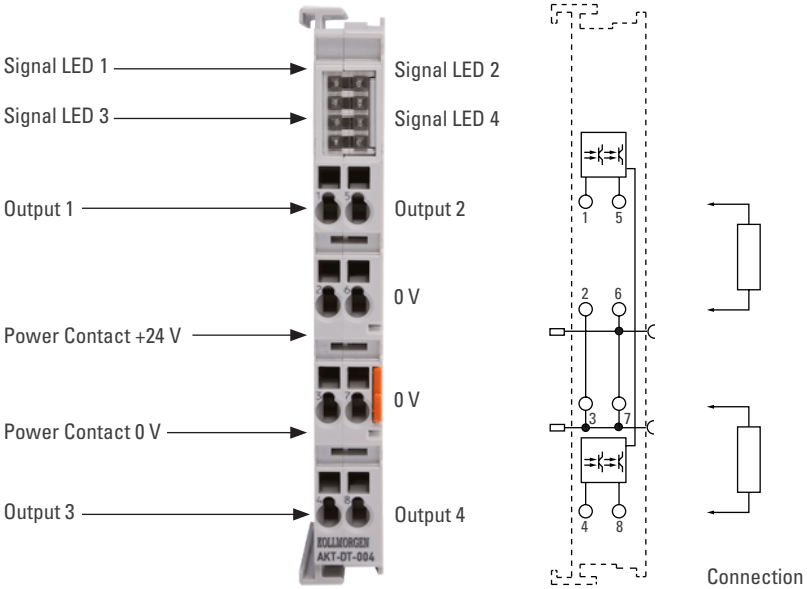

Electrical and Mechanical Specification	AKT-DT-004-000
Number of outputs	4
Rated load voltage	24 V DC (-15 % /+ 20 %)
Load type	Ohmic, inductive, lamp load
Max. output current	0.5 A (short-circuit-proof) per channel
Reverse voltage protection	Yes
Electrical isolation	500 V_{rms} (standard-bus / field potential)
Current consumption power from contacts	Typ. 30 mA
Current consumption standard-bus	Typ. 9 mA
Bit width in the process image	4 outputs
Configuration	No address or configuration settings
Weight	70 g approx.
Operating/storage temperature	0 C ... +55 °C /-25 °C... +85 °C
Relative humidity	95 %, no condensation
Vibration/shock resistance	Conforms to EN 60068-2-6 / EN 60068-2-27/ 29
EMC immunity/emission	Conforms to EN 61000-6-2 / EN 61000-6-4
Protect. class/installation pos.	IP 20 / variable
Pluggable wiring	For all Bus Terminals

203A West Rock Road • Radford, VA 24141 USA • Phone: 1-540-633-3545